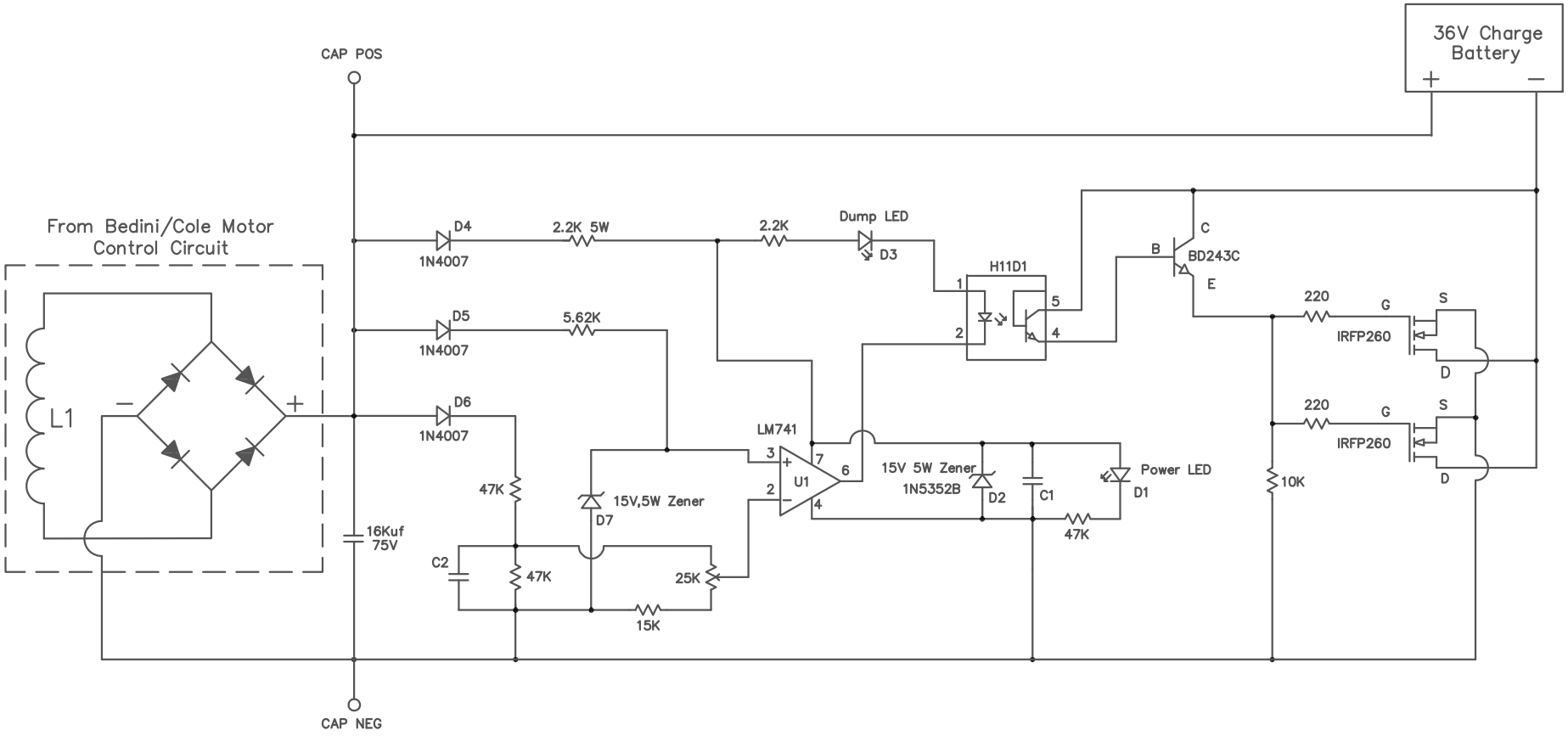


| Bedini 36V Comparator Circuit | | |
|---|---|---|
| | | |
| Ron Chase | 12−1−11 | |